SDS-T-135 Minor Repair Kit #85969

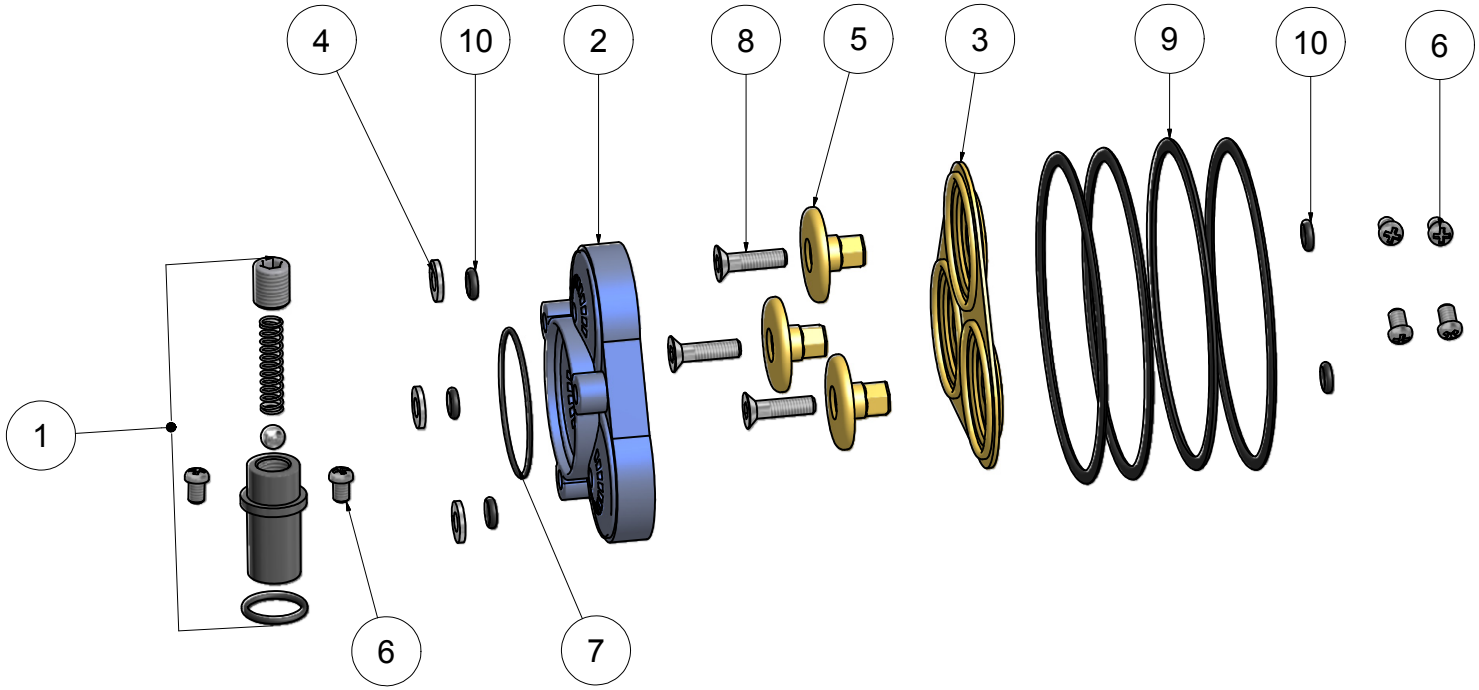

Parts List			
ITEM	QTY	PART NUMBER	DESCRIPTION
1	1	6001025	Relief Valve Assembly
2	1	5000709	Check Valve, Triplex
3	1	5000038	Diaphragm, SDS-T-135
4	3	5000015	Washer, AN-960 #10 Flat
5	3	6000726	Piston, Top Mount Quad
6	6	5000530	Screw, 8-32 X 5-16
7	1	5000019	O-Ring, Triplex CV
8	3	5000521	10-32 X 1 Piston Screw
9	4	5000020	O-Ring, Housing
10	5	5000015	O-Ring, End Cap

DRAWN J. Allen	11/6/2004	SunPumps
CHECKED		TITLE Minor Kit, SDS-T-135
QA		
MFG		
APPROVED		SIZE C / DWG NO 85969 / REV
		SCALE / SHEET 1 OF 1